DATA SHEET

Water calibrator for CTA

Velocity and directional of CTA probes in liquids

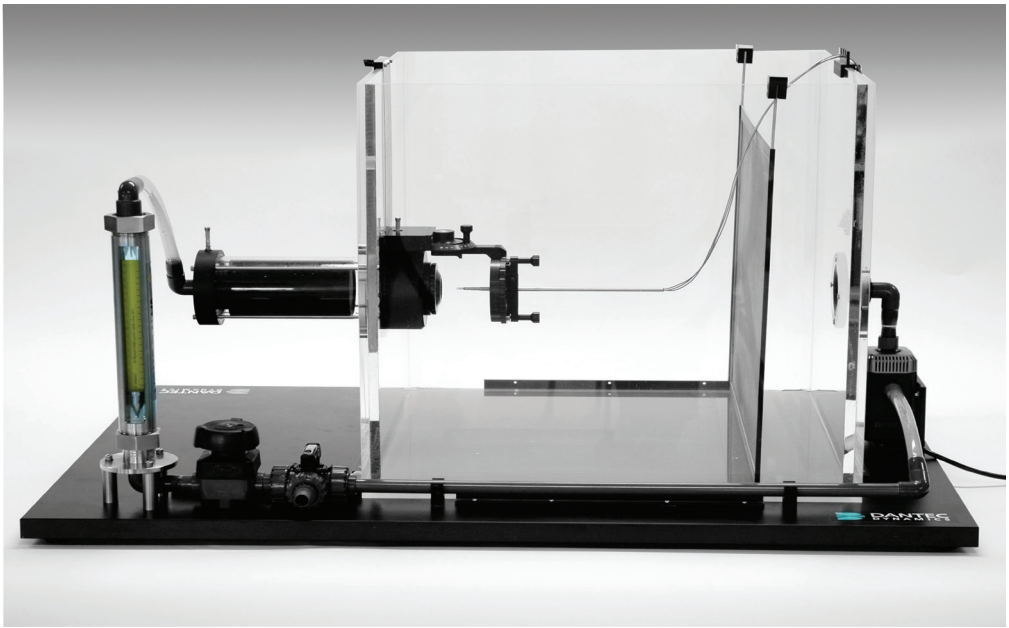

Introduction

Calibration of fiber and film probes in water often presents a problem, as only few applications allow the probe to be calibrated in situ. The Dantec water calibrator is a self-contained, transportable unit that allows probes to be calibrated before installation in the measurement setup.

Key benefits

- Velocity calibration of fiber and film probes
- Velocity range 0.005 to 2 m/s
- Traceable to LDA calibration at Dantec

Description

The velocity is adjusted manually by means of a valve. The flow meter reading is introduced into an Excel® spreadsheet, supplied with the system that calculates the jet velocity. A grounding electrode provides grounding of the water to the signal ground of the anemometer, which is of paramount importance in order to avoid electrolysis damage of the probes during operation.

Probe mounting

The probes are mounted with their sensors perpendicular to the jet. Fiber probes should also have the prong ends parallel with the flow. A mounting holder that handles all Dantec standard probes is supplied with the calibrator.

Jet characteristics

The calibrator is equipped with three nozzles. The jet profile in the measurement cross-section (flush with the protruded nozzle rim) is flat, with a boundary layer thickness of less than 10% of the diameter. The turbulence intensity is less than 3%.

Velocity calculation

The velocity in the calibration cross-section is calculated on the basis of the variable flow meter reading and the nozzle size. The variable flow meter is calibrated at Dantec against the centerline jet velocity measured by a Laser-Doppler Anemometer system.
This provides a flow meter calibration transfer function for each nozzle, which is used in the Excel calibration spreadsheet delivered with each calibrator.
Flow meter reading (height in mm) and nozzle size are simply entered into the spreadsheet, which then provides the velocity in m/s.

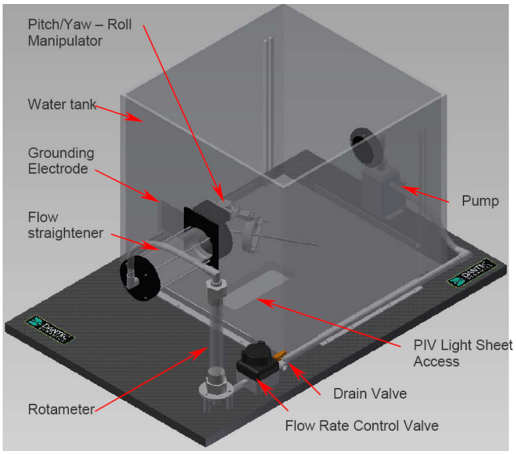

Option

Directional calibration

Directional calibration of slanted sensor probes improves the accuracy of measurement of flow angles, by applying the exact pitch and yaw coefficients of the probe rather than default values.
Directional calibration is done by changing the probe orientation with respect to a known flow. This is done using a manual Pitch/Yaw/Roll Manipulator attached to the nozzle section of the water calibrator.

Specifications	
Velocity range, total	0.005 - 2 m/s
Velocity range 28 mm dia. Nozzle	0.005 - 0.20 m/s
Velocity range 12.4 mm dia. Nozzle	0.20 - 1.00 m/s
Velocity range 8.8 mm dia. Nozzle	0.40 - 2.00 m/s
Nozzle areas, nominal	600, 120 and 60 mm^2
Accuracy	±2% OR ±0.0015 m/s
Turbulence intensity	< 3%

Order information

Item no.	Model
9055C0102	Water Calibrator 0.005-2 m/s velocity range
9090H0033	StreamLine Pitch/Yaw/Roll Manipulator air/water

DANTEC DYNAMICS Turn Measurements into Knowledge

Prager Elektronik
Traunstraße 21, A-2120 Wolkersdorf
T:+43 2245 6725 F:+43 2245 559633
office@prager-elektronik.at
www.prager-elektronik.at

NOVA INSTRUMENTS